TSM 200S - PLYWOOD

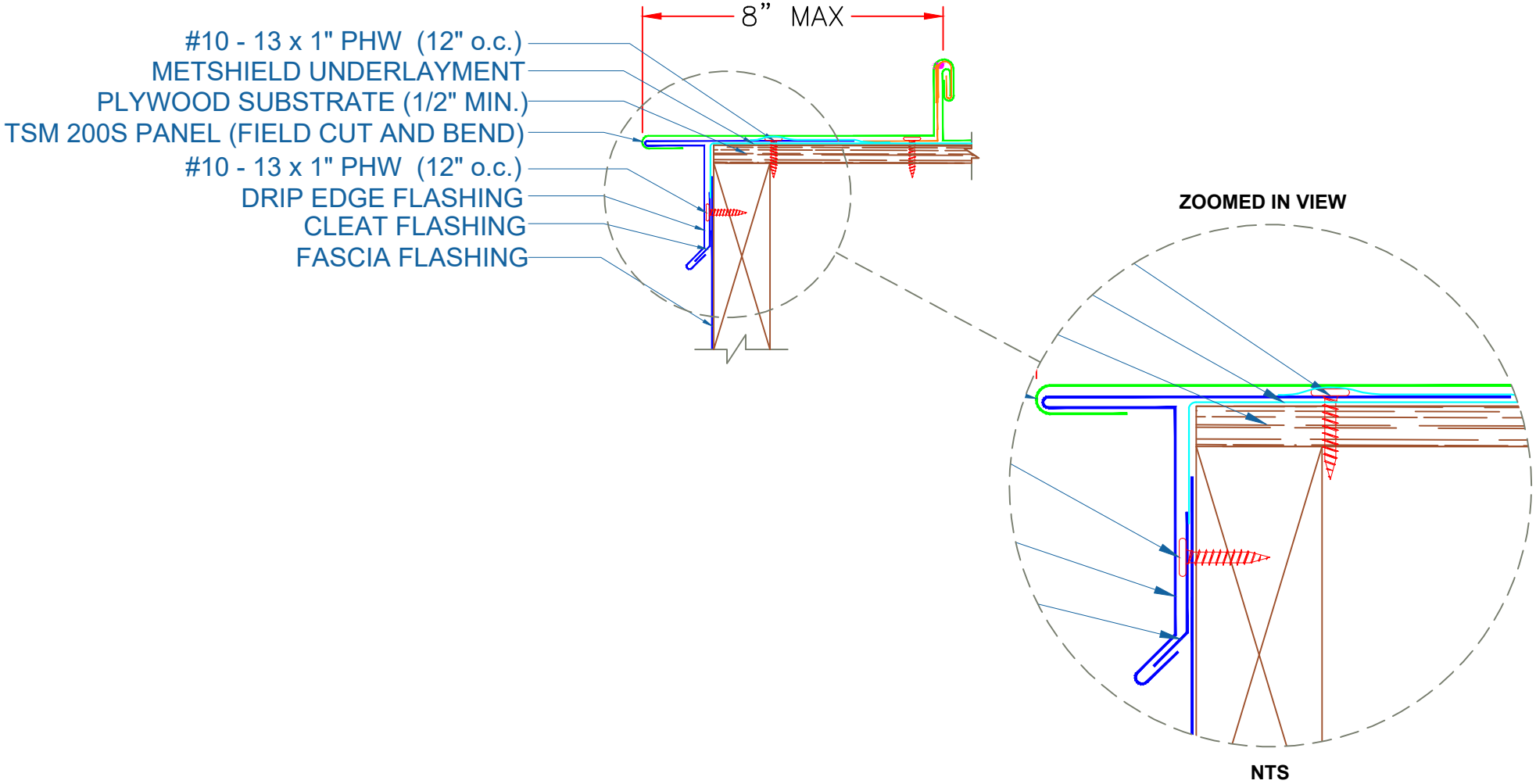

NTS

GABLE w/DRIP EDGE

SCALE: 3" = 1'-0"

TRI-STATE METALS
41 N. LAWN AVE
ELMSFORD, NY 10523
P: 914-347-8157

EFFECTIVE DATE: 08-17-17
SUBJECT TO CHANGE WITHOUT NOTICE